WATER FALL Cascade spout with individual jets for wall mounting - Brushed Dark Platinum

IMO

13 425 979 Product version from 10/1/2023

- 22mm projection
- PEARLSTREAM
- plate 240 mm x 60 mm
- connection 1/2", for shortening
- plug-link mounting
- Max. flow rate 9.5 l/min (at 3 bar)

Fits: IMO, LULU, MADISON, MEM, TARA, CL.1, LISSÉ, VAIA, META, CYO

Brushed Dark Platinum	13 425 979-99
Chrome	13 425 979-00
Brushed Platinum	13 425 979-06
Platinum	13 425 979-08
Dark Chrome	13 425 979-19
Light Gold	13 425 979-26
Brushed Light Gold	13 425 979-27
Brushed Durabrass (23kt Gold)	13 425 979-28
Matte Black	13 425 979-33
Brushed Bronze	13 425 979-42
Brushed Champagne (22kt Gold)	13 425 979-46
Champagne (22kt Gold)	13 425 979-47
Brushed Chrome	13 425 979-93

Recommended miscellaneous

Concealed wall elbow - 35 085 970 90
●max. recess depth mm
●min. recess depth mm

Recommended miscellaneous

Concealed wall elbow - 35 085 970 90
●max. recess depth mm
●min. recess depth mm

WATER FALL Cascade spout with individual jets for wall mounting - Brushed Dark Platinum

IMO

13 425 979 Product version from 10/1/2023
mm [inches]

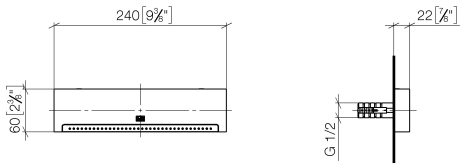

Flow rate chart

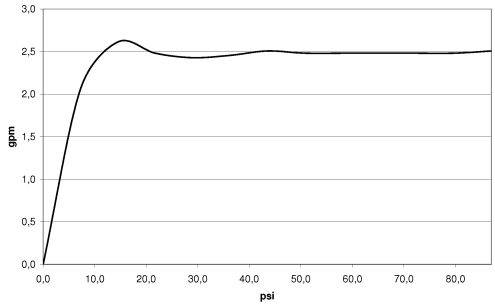

Trajectory diagram

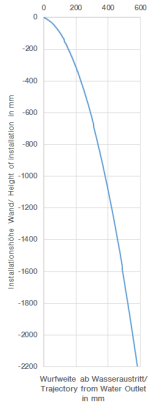

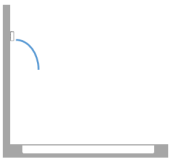

Codes & Standards

DIN 4109	ISO 3822	Ü-Zeichen

Certificates

LGA_19

WATER FALL Cascade spout with individual jets for wall mounting - Brushed Dark Platinum

IMO

13 425 979 Product version from 10/1/2023

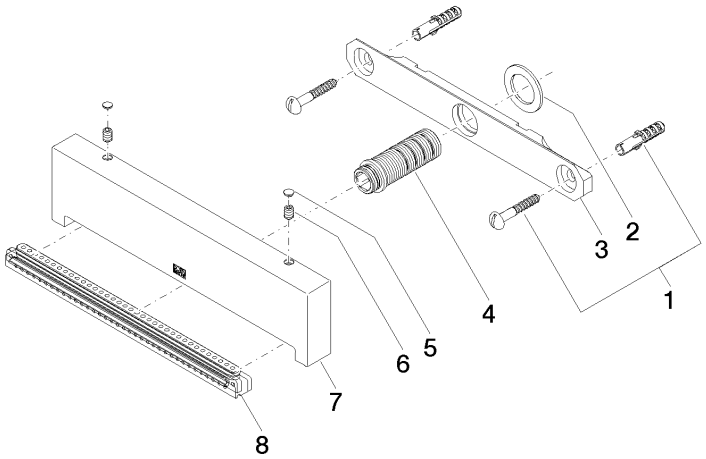

Spare parts list

No.	Item Number	Name	Quantity used	Delivery time
1	04 30 31 024 01 90	fixing set	1	2
2	09 14 05 009 90	seal	1	2
3	09 17 97 053 90	holder	1	2
4	90 24 03 199 00 90	connection	1	2
5	90 31 20 087 00-99	plug	1	30
6	09 31 11 144 90	pin	2	2
7	09 17 01 185 20-99	spout	1	30
8	90 29 03 071 00 90	insert	1	2

We reserve the right to change designs, product range and technical specifications without prior notice.
More information can be found at: www.dornbracht.com +49 (0) 2371 8899 900 mail@dornbracht.com